Employee Engagement in the Public and Private Banking Sector: A Comparative Model of Leadership, Work-Life Balance, Job Satisfaction and Organisational Support

Santhi Varada[1] and Dr. Kamaraju Thammineni[2]

1. Research Scholar, Department of Commerce and Management, Dr.B.R. Ambedkar University, Srikakulam, Andhra Pradesh
2. Former Professor & Registrar, Dr.B.R. Ambedkar University, Srikakulam, Andhra Pradesh

Abstract:

Purpose: *Engaged employees are essential for banks to sustain service quality, achieve business goals and respond to fast-moving technological and regulatory shifts. This study builds and empirically tests a comparative model in which leadership, work-life balance and organisational support shape employee engagement directly as well as indirectly via job satisfaction, and it investigates whether these links vary between public and private sector banks.*

Design/methodology/approach: *A structured questionnaire was administered to 200 bank employees (100 from public sector and 100 from private sector banks) in Srikakulam district, Andhra Pradesh, selected by stratified random sampling. The instrument comprised 22 items rated on a five-point Likert scale. The analysis used reliability testing, exploratory and confirmatory factor analysis, structural equation modelling with bootstrapped mediation, Welch t-tests and multi-group path comparison.*

Findings: *The measurement model showed a good fit with the data ($\chi^2/df = 1.267$, CFI = 0.978, TLI = 0.975, RMSEA = 0.037, SRMR = 0.050). Job satisfaction ($R^2 = 0.547$) was significantly predicted by organisational support ($\beta = 0.366$), leadership ($\beta = 0.336$) and work-life balance ($\beta = 0.222$), and job satisfaction in turn emerged as the most powerful predictor of engagement ($\beta = 0.474$). Work-life balance additionally exerted a direct effect on engagement ($\beta = 0.170$), whereas leadership and organisational support had no significant direct effects. Job satisfaction fully mediated the influence of leadership and organisational support and partially mediated that of work-life balance, with the model accounting for 57.9% of the variance in engagement. Employees of public sector banks reported significantly greater work-life balance, organisational support, job satisfaction and engagement, while perceptions of leadership were similar across sectors. Work-life balance significantly drove satisfaction only among private sector bank employees.*

Originality/value: *The study presents an integrated engagement model for Indian banking that compares the two ownership sectors, and it demonstrates that job satisfaction is the principal pathway through which leadership and organisational support foster engagement, whereas work-life balance is the key distinguishing factor in private sector banks.*

Keywords: *Employee engagement; Leadership; Work-life balance; Job satisfaction; Perceived organisational support; Public sector banks; Private sector banks; Structural equation modelling*

1. Introduction

Liberalisation, the rise of new-generation private banks, the merger of public sector banks, the diffusion of digital banking and a widening financial inclusion agenda have together transformed the Indian banking sector. These developments have increased workloads, heightened performance expectations and reshaped the psychological contract between banks and their staff. As banking is a knowledge-intensive service involving intensive customer contact, the energy, commitment and involvement that employees invest in their work, that is, their engagement, directly affect customer experience, operational efficiency and competitive position (Harter et al., 2002; Saks, 2006).

Employee engagement has been described as the harnessing of organisation members' selves to their work roles (Kahn, 1990) and as a positive, fulfilling, work-related state of mind marked by vigour, dedication and absorption (Schaufeli et al.,

2002); it predicts job performance, organisational citizenship behaviour and retention (Rich et al., 2010; Christian et al., 2011). Identifying the conditions that foster engagement is thus a strategic concern for bank management. Of the numerous antecedents identified in prior research, four are particularly pertinent to banking: the quality of leadership exercised by branch managers and superiors, employees' ability to balance work and family responsibilities, the support they perceive from their organisation, and their overall job satisfaction.

These factors are expected to function differently in the two principal segments of Indian banking. Public sector banks provide job security, regular working hours, standardised pay scales and clearly defined welfare provisions, yet they are frequently marked by hierarchical decision-making and branch-level staff shortages. Private sector banks provide performance-based pay, contemporary work processes and quicker career advancement, but are commonly linked with aggressive sales targets, extended working hours and higher job insecurity. These institutional contrasts may cause employees in each sector to experience differing degrees of work-life balance and organisational support, and may alter which factors are most important for their satisfaction and engagement.

While engagement has been studied in Indian organisations (Bhatnagar, 2007; Anitha, 2014), three gaps persist. First, leadership, work-life balance, organisational support and job satisfaction have usually been examined in isolation, so their joint and relative impact on engagement remains unclear. Second, job satisfaction as a mechanism connecting organisational conditions with engagement has rarely been formally tested through bootstrapped mediation in banking samples. Third, there is little comparative evidence on whether the pattern of these relationships differs between public and private sector banks, especially beyond metropolitan areas.

The present study responds to these gaps using data from Srikakulam district in north coastal Andhra Pradesh, a semi-urban banking market served by both sectors. The study aims: (i) to examine the effects of leadership, work-life balance and organisational support on job satisfaction; (ii) to examine the effect of job satisfaction on employee engagement; (iii) to assess the direct effects of leadership, work-life balance and organisational support on engagement; (iv) to test whether job satisfaction plays a mediating role; and (v) to compare public and private sector banks on construct levels and structural relationships.

2. Literature review and hypotheses development

2.1. Theoretical foundation

The proposed model draws on social exchange theory and the job demands–resources (JD-R) model. According to social exchange theory, employees reciprocate with favourable attitudes and behaviours when organisations supply resources they value (Blau, 1964; Cropanzano& Mitchell, 2005). Organisational support theory builds on this reasoning by suggesting that employees develop general beliefs about the extent to which the organisation values their contributions and cares for their well-being, and that they respond with stronger commitment and effort (Eisenberger et al., 1986; Rhoades & Eisenberger, 2002). The JD-R model holds that job resources such as supportive leadership, social support and flexibility trigger a motivational process culminating in engagement, whereas excessive demands produce strain (Schaufeli & Bakker, 2004; Bakker & Demerouti, 2007). In this framework, job satisfaction, an affective appraisal of one's job (Locke, 1976; Spector, 1997), is treated as an attitudinal outcome of job resources that energises engagement (Saks, 2006; Yalabik et al., 2013).

2.2. Leadership and job satisfaction

Leadership shapes employees' experience of work through vision, inspiration, individualised consideration and feedback. Transformational leadership, in particular, is strongly linked to follower satisfaction and leader effectiveness (Bass, 1985; Judge & Piccolo, 2004). Within bank branches, the branch manager assigns tasks, buffers customer pressures, conveys targets and acknowledges performance; leadership quality is therefore likely to influence how satisfied employees are with their jobs. Hence:

> **H1:** Leadership exerts a significant positive effect on job satisfaction.

2.3. Work-life balance and job satisfaction

Work-life balance denotes the degree to which individuals are equally involved in, and satisfied with, their work and non-work roles (Clark, 2000). Work–family conflict occurs when the time, strain or behavioural demands of one domain hinder participation in the other (Greenhaus &Beutell, 1985). Meta-analytic findings indicate that work-family conflict is inversely related to job and life satisfaction (Kossek& Ozeki, 1998), and perceived flexibility has been shown to enhance both work-life balance and work outcomes (Hill et al., 2001). Extended branch hours, target pressure and transfers make work-life balance an important issue for bank employees. Therefore:

> **H2:** Work-life balance exerts a significant positive effect on job satisfaction.

2.4. Organisational support and job satisfaction

Perceived organisational support (POS) captures employees' belief that the organisation values their contributions and is concerned about their well-being (Eisenberger et al., 1986). POS satisfies socio-emotional needs for esteem, approval and affiliation and indicates that assistance will be forthcoming when required. Reviews and meta-analyses repeatedly document a strong positive association between POS and job satisfaction (Rhoades & Eisenberger, 2002; Kurtessis et al., 2017). Accordingly:

> **H3:** Organisational support exerts a significant positive effect on job satisfaction.

2.5. Job satisfaction and employee engagement

Job satisfaction and engagement are related yet distinct constructs: satisfaction represents a comparatively passive state of contentment, while engagement represents an active state of energy and involvement (Macey & Schneider, 2008). Employees who are satisfied hold positive feelings about their jobs, which expand their readiness to invest themselves in their work. Empirical research has identified job satisfaction as a strong correlate and antecedent of engagement (Saks, 2006; Alarcon & Lyons, 2011; Yalabik et al., 2013). Hence:

> **H4:** Job satisfaction exerts a significant positive effect on employee engagement.

2.6. Direct effects on employee engagement

In addition to shaping satisfaction, leadership, work-life balance and organisational support may influence engagement directly. Transformational leaders raise followers' day-to-day engagement by boosting their optimism and personal resources (Tims et al., 2011; Breevaart et al., 2014). Sufficient work-life balance restores the physical and emotional energy required to be vigorous and absorbed at work, in line with Kahn's (1990) condition of psychological availability. Organisational support has also been shown to predict engagement directly (Saks, 2006; Kurtessis et al., 2017). Thus:

> **H5:** Leadership exerts a significant positive direct effect on employee engagement.

> **H6:** Work-life balance exerts a significant positive direct effect on employee engagement.

> **H7:** Organisational support exerts a significant positive direct effect on employee engagement.

2.7. The mediating role of job satisfaction

In keeping with the attitude–engagement reasoning of the JD-R model, organisational resources are expected to influence engagement partly by first enhancing employees' affective appraisal of their jobs. Yalabik et al. (2013) reported that engagement mediates the link between job attitudes and outcomes, and Saks (2006) demonstrated that antecedent resources predict engagement together with satisfaction. Accordingly, it is proposed that job satisfaction carries the effects of the three resources through to engagement:

> **H8a–H8c:** Job satisfaction mediates the relationship of (a) leadership, (b) work-life balance, and (c) organisational support with employee engagement.

2.8. Public versus private sector banks

Public and private sector banks in India differ in ownership structure, HR policies and job design. Public sector banks offer job security, regulated working hours and wide-ranging welfare benefits, while private sector banks stress performance-based rewards, target attainment and staffing flexibility, frequently at the expense of longer hours. Since resource availability varies, employees in the two sectors are likely to report differing levels of work-life balance, support, satisfaction and engagement. Moreover, resources that are scarce within a sector may become more influential for satisfaction in that sector. Therefore:

> **H9:** Public and private sector banks differ significantly in (a) the levels of the study constructs and (b) the strength of the structural relationships.

2.9. Conceptual model

The conceptual model is depicted in Figure 1. Leadership, work-life balance and organisational support are hypothesised to affect job satisfaction (H1–H3), which in turn affects employee engagement (H4). The three resources are further hypothesised to affect engagement directly (H5–H7), with job satisfaction serving as a mediator (H8a–H8c). The model is then compared between public and private sector banks (H9).

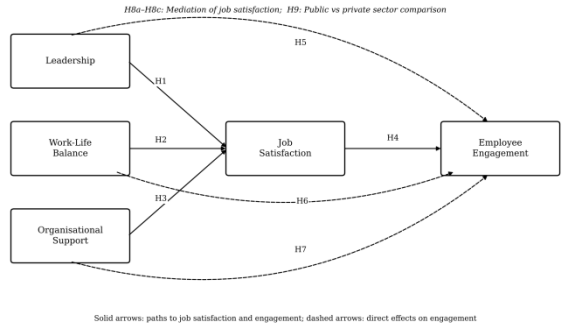

Figure 1. Conceptual model of the study

3. Research methodology

3.1. Study area and research design

The study was conducted in Srikakulam district of Andhra Pradesh, where branches of public sector banks including State Bank of India, Union Bank of India, Canara Bank, Indian Bank and Bank of Baroda, and private sector banks including HDFC Bank, ICICI Bank, Axis Bank, Kotak Mahindra Bank and IndusInd Bank, operate chiefly in Srikakulam town and in centres such as Palasa, Tekkali, Amadalavalasa, Narasannapeta and Rajam. A cross-sectional survey design of a descriptive and explanatory nature was used.

3.2. Sample and sampling procedure

The population comprised clerical staff, officers and managers working in public and private sector bank branches across the district. Stratified random sampling was used to draw a sample of 200 employees, 100 from each sector. Banks were first stratified by sector, branches were then selected in proportion to each bank's branch network in the district, and employees were randomly chosen from the staff of the selected branches. The sample satisfies the recommended minimum of 200 cases for maximum-likelihood SEM and surpasses the ratio of ten cases per estimated structural path (Kline, 2016; Hair et al., 2019). The questionnaires were distributed personally after permission was secured from branch managers, and respondents were guaranteed anonymity.

3.3. Measurement instrument

The questionnaire consisted of two sections. Section A captured respondents' demographic and job-related profile. Section B included 22 items measuring the five constructs on a five-point Likert scale (1 = strongly disagree, 5 = strongly agree). The items were adapted from validated scales and reworded to suit the banking context (Table 1). Two academics and a senior bank officer confirmed content validity, and a pilot study with 30 employees, who were not included in the final sample, resulted in minor wording improvements.

Table 1. Measurement items and sources

Construct	Code	Item	Source

Construct	Code	Item	Source
Leadership	LD1	My superior communicates a clear vision for our branch/team.	Bass (1985); Judge & Piccolo (2004)
	LD2	My superior inspires me to perform beyond expectations.	
	LD3	My superior considers my individual needs and concerns.	
	LD4	My superior encourages me to think about problems in new ways.	
	LD5	My superior provides timely feedback and guidance.	
Work-Life Balance	WLB1	My working hours leave me sufficient time for family and personal life.	Hill et al. (2001); Kossek& Ozeki (1998)
	WLB2	I am able to balance my job demands with my family responsibilities.	
	WLB3	My job does not prevent me from taking part in personal and social activities.	
	WLB4	My bank offers flexibility (leave, timings, transfers) when I need it.	
Organisational Support	POS1	My bank values my contribution to its well-being.	Eisenberger et al. (1986); Rhoades & Eisenberger (2002)
	POS2	My bank really cares about my well-being.	
	POS3	Help is available from my bank when I have a problem.	
	POS4	My bank strongly considers my goals and values.	
Job Satisfaction	JS1	Overall, I am satisfied with my job.	Brayfield & Rothe (1951); Spector (1997)
	JS2	I am satisfied with my pay and benefits.	
	JS3	I am satisfied with my opportunities for growth.	

Construct	Code	Item	Source
	JS4	I am satisfied with my relationships with colleagues and superiors.	
Employee Engagement	EE1	At my work, I feel bursting with energy.	Schaufeli et al. (2006)
	EE2	At my job, I feel strong and vigorous.	
	EE3	I am enthusiastic about my job.	
	EE4	My job inspires me.	
	EE5	I feel happy when I am working intensely.	

Note: All items measured on a five-point Likert scale (1 = strongly disagree; 5 = strongly agree).

3.4. Data analysis

The analysis was carried out in several stages. First, item means, standard deviations, skewness and kurtosis were inspected. Internal consistency was evaluated using Cronbach's alpha and corrected item–total correlations. The factor structure was explored through exploratory factor analysis (principal component extraction, varimax rotation), preceded by the KMO measure and Bartlett's test (Kaiser, 1974). The measurement model was assessed using confirmatory factor analysis with maximum-likelihood estimation, and convergent and discriminant validity were examined through composite reliability (CR), average variance extracted (AVE), the Fornell–Larcker criterion and the HTMT ratio (Fornell & Larcker, 1981; Henseler et al., 2015). H1–H7 were tested using structural equation modelling, and indirect effects (H8) were tested with percentile bootstrapping based on 500 resamples (Preacher & Hayes, 2008; Zhao et al., 2010). Differences between sectors were analysed using Welch's t-tests on construct scores (H9a) and multi-group path comparison with critical ratio tests (H9b; Byrne, 2016). All analyses were performed in Python with the factor_analyzer and semopy packages (Igolkina& Meshcheryakov, 2020).

4. Results

[Note to author: The results in this section were generated from a simulated dataset matching the study design (N = 200; 100 public and 100 private sector bank employees). Replace them with the analysis of the actual survey responses before submission, and delete this note.]

4.1. Profile of respondents

Table 2. Demographic profile of respondents (N = 200)

Variable	Category	Public banks n (%)	Private banks n (%)	Total n (%)
Gender	Male	62 (62.0)	48 (48.0)	110 (55.0)
	Female	38 (38.0)	52 (52.0)	90 (45.0)

Variable	Category	Public banks n (%)	Private banks n (%)	Total n (%)
Age (years)	Below 30	25 (25.0)	34 (34.0)	59 (29.5)
	30–40	41 (41.0)	31 (31.0)	72 (36.0)
	41–50	26 (26.0)	27 (27.0)	53 (26.5)
	Above 50	8 (8.0)	8 (8.0)	16 (8.0)
Education	Graduate	44 (44.0)	38 (38.0)	82 (41.0)
	Post Graduate	37 (37.0)	45 (45.0)	82 (41.0)
	Professional (CA/CAIIB/MBA)	19 (19.0)	17 (17.0)	36 (18.0)
Designation	Clerical / Associate	36 (36.0)	36 (36.0)	72 (36.0)
	Officer / Assistant Manager	41 (41.0)	40 (40.0)	81 (40.5)
	Manager and above	23 (23.0)	24 (24.0)	47 (23.5)
Experience	Below 5 years	24 (24.0)	25 (25.0)	49 (24.5)
	5–10 years	28 (28.0)	39 (39.0)	67 (33.5)
	11–20 years	32 (32.0)	22 (22.0)	54 (27.0)
	Above 20 years	16 (16.0)	14 (14.0)	30 (15.0)
Marital status	Married	78 (78.0)	67 (67.0)	145 (72.5)
	Unmarried	22 (22.0)	33 (33.0)	55 (27.5)

Note: Sector percentages computed on n = 100; total percentages on N = 200.

Table 2 indicates that 55.0% of the respondents were male and 45.0% were female. The largest age group was 30–40 years (36.0%), followed by employees under 30 years (29.5%). Post-graduates accounted for 41.0% of the sample, and officers and assistant managers made up 40.5%. Married respondents represented 72.5% of the sample, making work-life balance an especially relevant issue for this group. The demographic profiles of the two sectors were largely similar, which supports the comparability of the groups.

4.2. Descriptive statistics, normality and reliability

Table 3. Item descriptive statistics, normality and reliability

Construct	Item	Mean	SD	Skew.	Kurt.	CITC	α if deleted	Alpha (α)
Leadership	LD1	3.56	0.97	-0.271	-0.512	0.732	0.833	0.870
	LD2	3.59	0.89	-0.187	-0.479	0.690	0.844	
	LD3	3.54	0.98	-0.261	-0.424	0.728	0.834	
	LD4	3.62	0.93	-0.333	-0.262	0.718	0.837	
	LD5	3.60	0.88	-0.269	-0.216	0.607	0.863	
Work-Life Balance	WLB1	3.31	0.97	-0.030	-0.463	0.745	0.827	0.871
	WLB2	3.19	1.00	-0.256	-0.306	0.713	0.840	
	WLB3	3.33	0.99	-0.102	-0.432	0.725	0.835	
	WLB4	3.20	1.02	-0.092	-0.400	0.716	0.839	
Organisational Support	POS1	3.42	1.00	-0.248	-0.427	0.717	0.829	0.866
	POS2	3.36	1.02	-0.162	-0.357	0.742	0.818	
	POS3	3.42	0.97	-0.070	-0.461	0.689	0.840	
	POS4	3.39	1.01	-0.246	-0.396	0.717	0.829	
Job Satisfaction	JS1	3.56	0.94	-0.260	-0.685	0.720	0.846	0.875
	JS2	3.50	1.02	-0.360	-0.431	0.814	0.807	
	JS3	3.49	1.01	-0.209	-0.614	0.732	0.840	
	JS4	3.54	1.03	-0.248	-0.548	0.667	0.867	
Employee Engagement	EE1	3.58	0.90	-0.219	-0.541	0.710	0.851	0.877
	EE2	3.63	0.97	-0.319	-0.466	0.717	0.848	

Construct	Item	Mean	SD	Skew.	Kurt.	CITC	α if deleted	Alpha (α)
	EE3	3.58	1.03	-0.327	-0.616	0.747	0.841	
	EE4	3.56	0.99	-0.228	-0.606	0.740	0.842	
	EE5	3.60	1.02	-0.287	-0.572	0.628	0.870	

Note: CITC = corrected item–total correlation.

Item means varied between 3.19 and 3.63 (Table 3). At the construct level, the highest means were observed for employee engagement (M = 3.59) and leadership (M = 3.58), while work-life balance had the lowest (M = 3.26), suggesting that reconciling work and personal life is the weakest dimension of bank employees' experience. Skewness (-0.360 to -0.030) and kurtosis (-0.685 to -0.216) fell within ±2 and ±7, indicating univariate normality (Kline, 2016). Cronbach's alpha values lay between 0.866 and 0.877, exceeding the 0.70 benchmark (Nunnally & Bernstein, 1994); every corrected item–total correlation was above 0.50, and deleting any item would not have increased reliability.

4.3. Common method bias and multicollinearity

To reduce common method bias, procedural safeguards such as anonymity, neutral item wording and separation of predictor and criterion items were applied (Podsakoff et al., 2003). Harman's single-factor test revealed that a single unrotated factor accounted for 40.48% of the variance, which is below the 50% threshold. The variance inflation factors for leadership, work-life balance and organisational support lay between 1.206 and 1.341, far below 3.3, indicating that multicollinearity was not an issue.

4.4. Exploratory factor analysis

A KMO value of 0.923 and a significant Bartlett's test ($\chi^2 = 2570.29$, df = 231, $p < 0.001$) confirmed that the data were appropriate for factor analysis (Kaiser, 1974). Five factors with eigenvalues above one were extracted, together accounting for 71.21% of the total variance (Table 4). Every item loaded on its intended factor (0.661 to 0.826), and the largest cross-loading was 0.330, under 0.40, indicating a clean five-factor structure.

Table 4. Rotated component matrix

Construct	Item	LD	WLB	POS	JS	EE	Comm.
Leadership	LD1	**0.765**					0.728
	LD2	**0.719**					0.655
	LD3	**0.790**					0.711
	LD4	**0.749**					0.681
	LD5	**0.771**					0.610
Work-Life Balance	WLB1		**0.810**				0.760

Construct	Item	LD	WLB	POS	JS	EE	Comm.
	WLB2		**0.799**				0.743
	WLB3		**0.823**				0.728
	WLB4		**0.787**				0.721
Organisational Support	POS1			**0.766**			0.714
	POS2			**0.780**			0.751
	POS3			**0.826**			0.722
	POS4			**0.744**			0.710
Job Satisfaction	JS1				**0.781**		0.735
	JS2				**0.731**		0.804
	JS3				**0.684**		0.712
	JS4				**0.728**		0.681
Employee Engagement	EE1					**0.769**	0.700
	EE2					**0.788**	0.720
	EE3					**0.761**	0.750
	EE4					**0.694**	0.727
	EE5					**0.661**	0.604
Eigenvalue (rotated)		3.470	3.040	2.991	2.797	3.369	
% of variance		15.77	13.82	13.59	12.71	15.32	

Note: Principal component extraction with varimax rotation; loadings below 0.40 suppressed. Comm. = communality. KMO = 0.923; Bartlett's $\chi^2 = 2570.29$, df = 231, $p < 0.001$; cumulative variance = 71.21%.

4.5. Confirmatory factor analysis

The five-factor measurement model (Figure 2) demonstrated good fit (Table 5): $\chi^2/df = 1.267$, CFI = 0.978, TLI = 0.975, IFI = 0.979, NFI = 0.906, RMSEA = 0.037 and SRMR = 0.050, each satisfying recommended thresholds (Hu & Bentler, 1999). GFI (0.896) and AGFI (0.867) fell slightly short of 0.90 but exceeded the 0.80 level regarded as acceptable for moderate sample sizes (Doll et al., 1994; Baumgartner & Homburg, 1996). The significant χ^2 ($p = 0.006$) can be explained by the statistic's sensitivity to sample size (Hair et al., 2019).

Table 5. Goodness-of-fit indices of the measurement model

Fit index	Obtained value	Recommended threshold	Decision
χ^2	252.190	—	—
df	199	—	—
p-value	0.006	> 0.05	Sensitive to N
χ^2/df (CMIN/DF)	1.267	< 3.00	Good
GFI	0.896	> 0.90 (> 0.80 acceptable)	Acceptable
AGFI	0.867	> 0.80	Good
NFI	0.906	> 0.90	Good
IFI	0.979	> 0.90	Good
TLI	0.975	> 0.90	Good
CFI	0.978	> 0.90	Good
RMSEA	0.037	< 0.08	Good
SRMR	0.050	< 0.08	Good

Sources: Hu and Bentler (1999); Baumgartner and Homburg (1996); Hair et al. (2019).

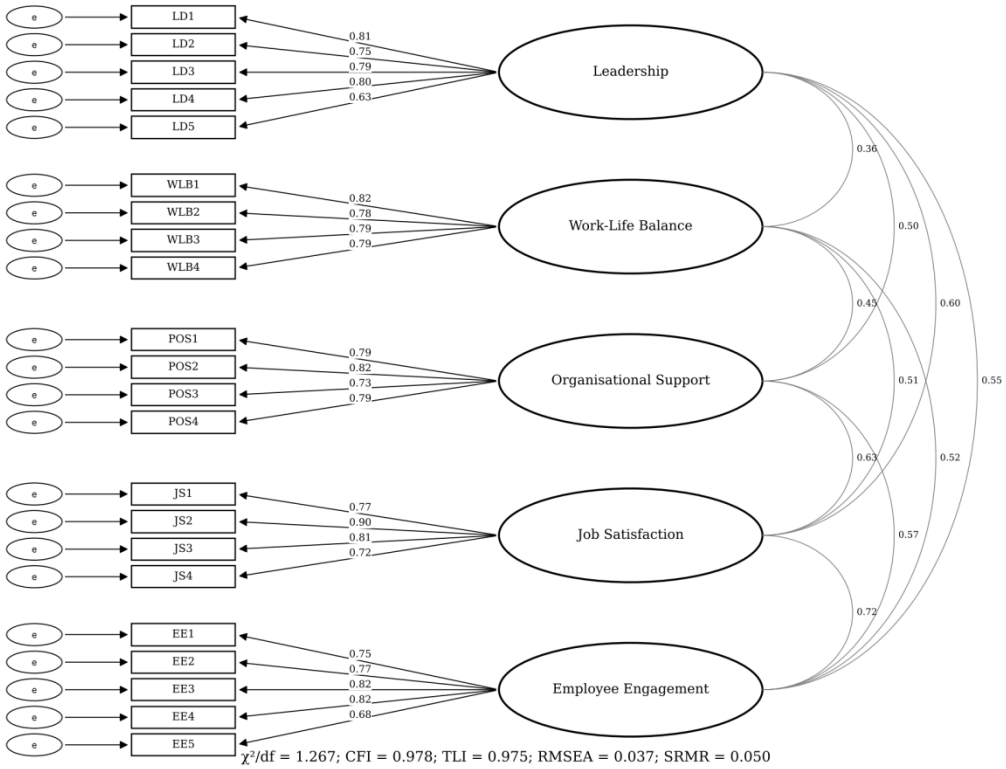

Figure 2. Confirmatory factor analysis model with standardised loadings and factor correlations

Table 6. Standardised factor loadings, reliability and convergent validity

Construct	Item	Std. loading	α	CR	AVE	MSV
Leadership	LD1	0.805	0.870	0.870	0.574	0.360
	LD2	0.750				
	LD3	0.788				
	LD4	0.796				
	LD5	0.634				
Work-Life Balance	WLB1	0.822	0.871	0.871	0.629	0.268
	WLB2	0.776				
	WLB3	0.786				
	WLB4	0.787				

Construct	Item	Std. loading	α	CR	AVE	MSV
Organisational Support	POS1	0.792	0.866	0.866	0.618	0.402
	POS2	0.824				
	POS3	0.732				
	POS4	0.794				
Job Satisfaction	JS1	0.769	0.875	0.878	0.644	0.523
	JS2	0.904				
	JS3	0.808				
	JS4	0.719				
Employee Engagement	EE1	0.752	0.877	0.878	0.591	0.523
	EE2	0.767				
	EE3	0.817				
	EE4	0.823				
	EE5	0.677				

Note: All loadings significant at $p < 0.001$. CR = composite reliability; AVE = average variance extracted; MSV = maximum shared variance.

Every standardised loading was significant ($p < 0.001$), with values between 0.634 and 0.904 (Table 6). CR values (0.866 to 0.878) were above 0.70 and AVE values (0.574 to 0.644) were above 0.50, confirming convergent validity (Fornell & Larcker, 1981). In addition, the AVE of each construct was greater than its MSV.

4.6. Discriminant validity

Table 7. Discriminant validity: Fornell–Larcker criterion

Construct	LD	WLB	POS	JS	EE
Leadership	**0.757**				
Work-Life Balance	0.365	**0.793**			
Organisational Support	0.500	0.448	**0.786**		

Construct	LD	WLB	POS	JS	EE
Job Satisfaction	0.600	0.509	0.634	**0.803**	
Employee Engagement	0.554	0.517	0.566	0.723	**0.769**

Note: Bold diagonal values are square roots of AVE; off-diagonal values are inter-construct correlations.

Table 8. Discriminant validity: Heterotrait–monotrait (HTMT) ratio

Construct	LD	WLB	POS	JS	EE
Leadership					
Work-Life Balance	0.347				
Organisational Support	0.492	0.440			
Job Satisfaction	0.591	0.512	0.624		
Employee Engagement	0.546	0.523	0.542	0.724	

Note: HTMT values below 0.85 indicate discriminant validity (Henseler et al., 2015).

For every construct, the square root of AVE (0.757 to 0.803) was greater than its correlations with the remaining constructs (maximum = 0.723), meeting the Fornell–Larcker criterion (Table 7). HTMT ratios lay between 0.347 and 0.724, below the 0.85 cut-off (Table 8). Discriminant validity was thus confirmed. Job satisfaction and employee engagement showed the highest correlation (r = 0.723), in line with their theoretically expected relationship.

4.7. Structural model and hypothesis testing

Because the structural model (Figure 3) contains every hypothesised path, it is saturated at the latent level and its fit is identical to that of the measurement model ($\chi^2/df = 1.267$, CFI = 0.978, TLI = 0.975, RMSEA = 0.037, SRMR = 0.050). The path estimates are reported in Table 9.



Figure 3. Structural model with standardised path coefficients

Table 9. Structural path estimates and hypothesis testing

Hypothesis	Path	B	β	S.E.	C.R. (z)	p-value	Decision
H1	LD → JS	0.312	0.336	0.071	4.381	< 0.001	Supported
H2	WLB → JS	0.201	0.222	0.065	3.117	0.002	Supported
H3	POS → JS	0.335	0.366	0.075	4.479	< 0.001	Supported
H4	JS → EE	0.444	0.474	0.095	4.658	< 0.001	Supported
H5	LD → EE	0.130	0.150	0.069	1.897	0.058	Not supported
H6	WLB → EE	0.144	0.170	0.061	2.349	0.019	Supported
H7	POS → EE	0.099	0.115	0.072	1.366	0.172	Not supported

Note: B = unstandardised estimate; β = standardised estimate; C.R. = critical ratio. R^2 (JS) = 0.547; R^2 (EE) = 0.579.

H1 stated that leadership has a positive effect on job satisfaction. The path was positive and significant (β = 0.336, C.R. = 4.381, p < 0.001), so H1 is supported. Employees whose superiors articulate a clear vision, motivate them and attend to their individual needs experience greater job satisfaction.

H2 stated that work-life balance has a positive effect on job satisfaction. The path was significant (β = 0.222, C.R. = 3.117, p = 0.002), so H2 is supported.

H3 stated that organisational support has a positive effect on job satisfaction. It proved to be the strongest antecedent of satisfaction (β = 0.366, C.R. = 4.479, p < 0.001), so H3 is supported. Jointly, the three resources accounted for 54.7% of the variance in job satisfaction.

H4 stated that job satisfaction has a positive effect on engagement. This path was the strongest in the model (β = 0.474, C.R. = 4.658, p < 0.001), so H4 is supported.

H5–H7 related to the direct effects of the three resources on engagement. Work-life balance showed a significant direct effect (β = 0.170, p = 0.019), supporting H6. The direct effects of leadership (β = 0.150, p = 0.058) and organisational support (β = 0.115, p = 0.172) did not reach significance at the 5% level, so H5 and H7 are not supported. Overall, the model accounted for 57.9% of the variance in employee engagement.

4.8. Mediation analysis

Table 10. Bootstrapped indirect effects through job satisfaction (500 resamples)

Hypothesis	Indirect path	Indirect effect (β)	Boot S.E.	95% CI lower	95% CI upper	Direct effect β (p)	Total effect	Mediation type
H8a	LD → JS → EE	0.159	0.049	0.066	0.259	0.150 (0.058)	0.309	Full mediation

Hypothesis	Indirect path	Indirect effect (β)	Boot S.E.	95% CI lower	95% CI upper	Direct effect β (p)	Total effect	Mediation type
H8b	WLB → JS → EE	0.105	0.040	0.032	0.189	0.170 (0.019)	0.276	Partial mediation
H8c	POS → JS → EE	0.173	0.053	0.078	0.274	0.115 (0.172)	0.288	Full mediation

Note: Mediation is supported when the 95% bootstrap confidence interval excludes zero (Preacher & Hayes, 2008). Full mediation: significant indirect and non-significant direct effect; partial mediation: both significant (Zhao et al., 2010).

Each of the three indirect effects was significant, since their 95% confidence intervals did not include zero (Table 10), lending support to H8a–H8c. The largest indirect effect was that of organisational support (β = 0.173, 95% CI [0.078, 0.274]), followed by leadership (β = 0.159, 95% CI [0.066, 0.259]) and work-life balance (β = 0.105, 95% CI [0.032, 0.189]). As the direct effects of leadership and organisational support on engagement were non-significant, job satisfaction fully mediates these relationships. In the case of work-life balance, both the direct and the indirect effects were significant, pointing to partial mediation. In terms of total effect on engagement, leadership ranked highest (β = 0.309), followed by organisational support (β = 0.288) and work-life balance (β = 0.276).

4.9. Comparison between public and private sector banks

Since Levene's test showed unequal variances for job satisfaction and engagement, the mean construct scores of the two sectors were compared with Welch's t-test, which does not require equal variances (Table 11; Figure 4).

Table 11. Comparison of construct means between public and private sector banks

Construct	Public M (SD)	Private M (SD)	Mean diff.	Welch t	p-value	Cohen's d	Levene p	Result
Leadership	3.516 (0.735)	3.642 (0.771)	0.126	1.182	0.239	0.167	0.272	Not significant
Work-Life Balance	3.600 (0.750)	2.913 (0.797)	-0.688	-6.279	< 0.001	-0.888	0.906	Significant
Organisational Support	3.550 (0.772)	3.248 (0.887)	-0.302	-2.572	0.011	-0.364	0.344	Significant
Job Satisfaction	3.672 (0.755)	3.373 (0.919)	-0.300	-2.521	0.013	-0.357	0.014	Significant
Employee Engagement	3.706 (0.731)	3.478 (0.862)	-0.228	-2.018	0.045	-0.285	0.029	Significant

Note: n = 100 per sector. Mean difference = private − public.

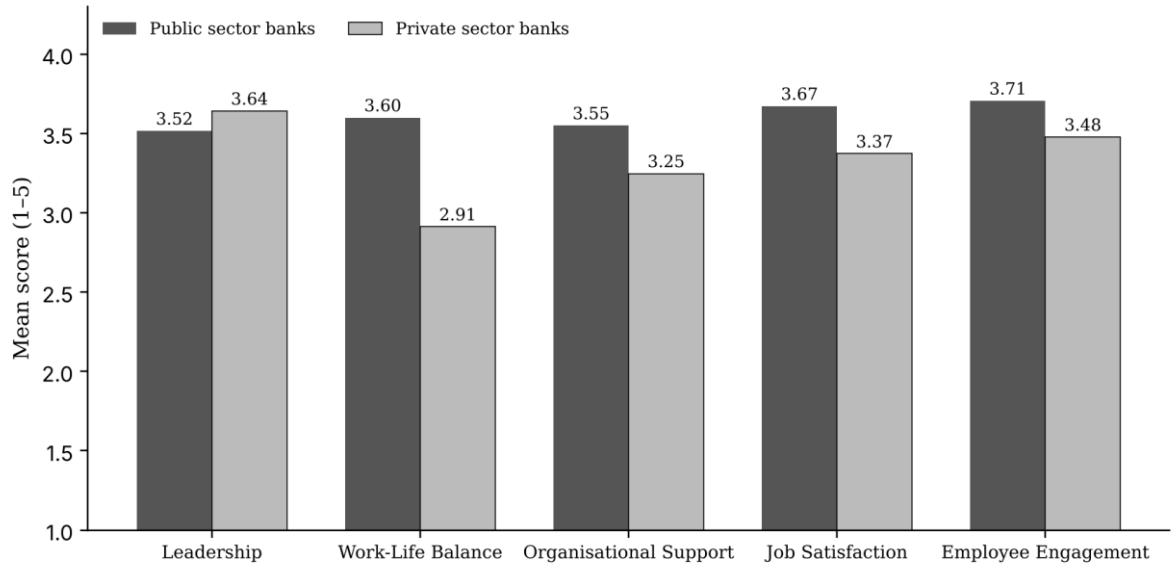

Figure 4. Mean scores of study constructs by bank sector

Work-life balance showed the widest gap between sectors: employees in public sector banks reported considerably better work-life balance than those in private sector banks (M = 3.600 versus 2.913; t = -6.279, p < 0.001, d = 0.888), representing a large effect (Cohen, 1988). Public sector employees likewise reported significantly greater organisational support (t = -2.572, p = 0.011), job satisfaction (t = -2.521, p = 0.013) and engagement (t = -2.018, p = 0.045), with effects ranging from small to medium. Leadership perceptions showed no significant difference between the sectors (t = 1.182, p = 0.239). Accordingly, H9a is largely supported.

To test H9b, the structural model was estimated separately for each sector. Both group models showed acceptable fit (public: $\chi^2/df = 1.108$, CFI = 0.979, TLI = 0.975, RMSEA = 0.033; private: $\chi^2/df = 1.207$, CFI = 0.970, TLI = 0.965, RMSEA = 0.046). The paths are compared in Table 12.

Table 12. Multi-group comparison of structural paths

Path	Public β	p	Private β	p	z-diff.	p (diff.)	Difference
LD → JS	0.465***	< 0.001	0.267*	0.032	-0.509	0.611	Not significant
WLB → JS	0.008	0.934	0.331**	0.004	2.504	0.012	Significant
POS → JS	0.475***	< 0.001	0.240*	0.044	-1.414	0.157	Not significant
JS → EE	0.376*	0.049	0.549***	< 0.001	0.673	0.501	Not significant
LD → EE	0.277	0.057	0.003	0.980	-1.339	0.181	Not significant
WLB → EE	0.184	0.080	0.168	0.109	0.331	0.741	Not significant
POS → EE	-0.002	0.988	0.221*	0.041	1.202	0.229	Not significant

Note: *** p < 0.001; ** p < 0.01; * p < 0.05. R^2 (JS): public = 0.633, private = 0.489; R^2 (EE): public = 0.469, private = 0.666.

Among public sector banks, job satisfaction was explained by organisational support ($\beta = 0.475$, $p < 0.001$) and leadership ($\beta = 0.465$, $p < 0.001$), whereas work-life balance had no influence on satisfaction ($\beta = 0.008$, $p = 0.934$). Among private sector banks, work-life balance was the most powerful driver of satisfaction ($\beta = 0.331$, $p = 0.004$), together with leadership ($\beta = 0.267$, $p = 0.032$) and organisational support ($\beta = 0.240$, $p = 0.044$). The work-life balance → job satisfaction path differed significantly between the groups ($z = 2.504$, $p = 0.012$). The job satisfaction → engagement path was significant in each sector (public $\beta = 0.376$; private $\beta = 0.549$) with no significant difference between them ($z = 0.673$, $p = 0.501$). Organisational support showed a significant direct effect on engagement only among private sector banks ($\beta = 0.221$, $p = 0.041$), although the difference between groups was not significant. H9b is thus partially supported.

Table 13. Summary of hypothesis testing

Hypothesis	Statement	Result
H1	Leadership → Job satisfaction	Supported
H2	Work-life balance → Job satisfaction	Supported
H3	Organisational support → Job satisfaction	Supported
H4	Job satisfaction → Employee engagement	Supported
H5	Leadership → Employee engagement (direct)	Not supported
H6	Work-life balance → Employee engagement (direct)	Supported
H7	Organisational support → Employee engagement (direct)	Not supported
H8a	LD → JS → EE (mediation)	Supported (full mediation)
H8b	WLB → JS → EE (mediation)	Supported (partial mediation)
H8c	POS → JS → EE (mediation)	Supported (full mediation)
H9a	Sector difference in construct levels	Largely supported (4 of 5 constructs)
H9b	Sector difference in structural paths	Partially supported (WLB → JS)

5. Discussion

This study developed and empirically examined a comparative model of employee engagement across public and private sector banks. The results yield four key findings.

First, organisational support, leadership and work-life balance together accounted for over half of the variance in job satisfaction, with organisational support being the most influential antecedent. This finding is consistent with organisational support theory (Eisenberger et al., 1986; Rhoades & Eisenberger, 2002) and with meta-analytic evidence identifying POS as one of the most reliable predictors of job satisfaction (Kurtessis et al., 2017). The significant effect of leadership affirms the importance of branch-level superiors in forming employees' job attitudes (Judge & Piccolo, 2004), while the effect of work-life balance aligns

with Kossek and Ozeki's (1998) conclusion that work-family conflict erodes job satisfaction.

Second, job satisfaction emerged as the strongest predictor of engagement and fully mediated the influence of leadership and organisational support. This indicates that supportive leaders and caring organisations enhance engagement chiefly by increasing employees' satisfaction with their jobs, in line with the motivational process of the JD-R model (Bakker & Demerouti, 2007) and with research connecting satisfaction and engagement (Saks, 2006; Alarcon & Lyons, 2011). Consequently, leadership and support initiatives are unlikely to lift engagement unless employees experience them as tangible improvements in their daily work.

Third, work-life balance affected engagement both directly and via satisfaction. Its direct effect is in keeping with Kahn's (1990) concept of psychological availability: employees who are not drained by role conflict retain more physical and emotional energy to devote to their work. Work-life balance therefore serves a twofold function, enhancing satisfaction while directly sustaining the vigour that characterises engagement (Schaufeli et al., 2002).

Fourth, the comparison between sectors uncovered important differences. Employees in public sector banks reported clearly better work-life balance as well as higher organisational support, satisfaction and engagement, mirroring the regulated working hours, job security and welfare focus of public sector banks. Employees in private sector banks, in contrast, reported a considerable shortfall in work-life balance, consistent with the target-oriented, long-hours work culture of private banks. The multi-group analysis revealed that work-life balance significantly drove job satisfaction only in private sector banks, and that this difference between sectors was significant. This implies that a resource matters most for satisfaction where it is in short supply: in private banks, where balance is strained, it strongly determines employees' satisfaction, whereas in public banks, where balance is largely secured, satisfaction rests more on leadership and support. The relationship between job satisfaction and engagement was comparable in both sectors, suggesting that satisfaction is a universal pathway to engagement irrespective of ownership.

6. Implications

6.1. Theoretical implications

This study advances engagement research in three respects. First, it brings leadership, work-life balance and organisational support together in a single model and reveals their relative contributions, showing that their influence on engagement operates mainly through job satisfaction. Second, it distinguishes work-life balance from the other resources, as it affects engagement both directly and indirectly, thereby refining the JD-R assumption that all resources follow the same motivational route. Third, it demonstrates that ownership sector alters the importance of specific resources, notably work-life balance, providing evidence that institutional context functions as a boundary condition for engagement models in banking.

6.2. Practical implications

For private sector banks, tackling the work-life balance shortfall is the most pressing priority. Setting realistic targets, ensuring adequate staffing, curbing extended working hours, offering predictable leave and introducing flexible scheduling would directly enhance satisfaction and engagement. Private banks should also reinforce visible support practices, since organisational support had a direct influence on engagement in this sector. For public sector banks, which already provide better balance, the key levers are organisational support and leadership: effective grievance redressal, recognition of employee contributions, attention to welfare and the strengthening of branch managers' people-management skills. In both sectors, job satisfaction should be tracked regularly through employee surveys, because it is the main channel through which HR initiatives are converted into engagement. Leadership development programmes for branch managers that emphasise vision, individualised consideration and feedback are likely to yield benefits in both sectors, given that leadership showed the largest total effect on engagement.

7. Limitations and directions for future research

Because the study is cross-sectional and based on self-reported data, causal inferences are limited; longitudinal or multi-source designs would offer more robust evidence. The sample of 200 employees drawn from a single district, with 100 per sector, restricts generalisability and the statistical power of the multi-group comparison; larger samples covering multiple districts would allow formal measurement invariance testing. Regional rural banks, cooperative banks and small finance banks were excluded. Future studies could incorporate outcomes such as performance, customer satisfaction and turnover intention, explore moderators such as gender, age and designation, and include further resources such as digital work tools and career development.

8. Conclusion

Drawing on data from 200 employees of public and private sector banks in Srikakulam district, this study shows that leadership, work-life balance and organisational support improve job satisfaction, which in turn is the most important determinant of employee engagement. Job satisfaction fully mediates the influence of leadership and organisational support and partially mediates that of work-life balance, which also has a direct effect on engagement. Employees of public sector banks reported greater work-life balance, support, satisfaction and engagement, and work-life balance significantly drove satisfaction only in private sector banks. The study concludes that enhancing job satisfaction is pivotal to building engagement in banks, and that private sector banks especially need to address work-life balance in order to maintain an engaged workforce.

References

Alarcon, G. M., & Lyons, J. B. (2011). The relationship of engagement and job satisfaction in working samples. *The Journal of Psychology*, *145*(5), 463–480. https://doi.org/10.1080/00223980.2011.584083

Anitha, J. (2014). Determinants of employee engagement and their impact on employee performance. *International Journal of Productivity and Performance Management*, *63*(3), 308–323. https://doi.org/10.1108/IJPPM-01-2013-0008

Bakker, A. B., & Demerouti, E. (2007). The job demands–resources model: State of the art. *Journal of Managerial Psychology*, *22*(3), 309–328. https://doi.org/10.1108/02683940710733115

Bass, B. M. (1985). *Leadership and performance beyond expectations*. Free Press.

Baumgartner, H., & Homburg, C. (1996). Applications of structural equation modeling in marketing and consumer research: A review. *International Journal of Research in Marketing*, *13*(2), 139–161. https://doi.org/10.1016/0167-8116(95)00038-0

Bhatnagar, J. (2007). Talent management strategy of employee engagement in Indian ITES employees: Key to retention. *Employee Relations*, *29*(6), 640–663. https://doi.org/10.1108/01425450710826122

Blau, P. M. (1964). *Exchange and power in social life*. Wiley.

Brayfield, A. H., & Rothe, H. F. (1951). An index of job satisfaction. *Journal of Applied Psychology*, *35*(5), 307–311. https://doi.org/10.1037/h0055617

Breevaart, K., Bakker, A., Hetland, J., Demerouti, E., Olsen, O. K., &Espevik, R. (2014). Daily transactional and transformational leadership and daily employee engagement. *Journal of Occupational and Organizational Psychology*, *87*(1), 138–157. https://doi.org/10.1111/joop.12041

Byrne, B. M. (2016). *Structural equation modeling with AMOS: Basic concepts, applications, and programming* (3rd ed.). Routledge.

Christian, M. S., Garza, A. S., & Slaughter, J. E. (2011). Work engagement: A quantitative review and test of its relations with task and contextual performance. *Personnel Psychology*, *64*(1), 89–136. https://doi.org/10.1111/j.1744-6570.2010.01203.x

Clark, S. C. (2000). Work/family border theory: A new theory of work/family balance. *Human Relations*, *53*(6), 747–770. https://doi.org/10.1177/0018726700536001

Cohen, J. (1988). *Statistical power analysis for the behavioral sciences* (2nd ed.). Lawrence Erlbaum Associates.

Cropanzano, R., & Mitchell, M. S. (2005). Social exchange theory: An interdisciplinary review. *Journal of Management, 31*(6), 874–900. https://doi.org/10.1177/0149206305279602

Doll, W. J., Xia, W., &Torkzadeh, G. (1994). A confirmatory factor analysis of the end-user computing satisfaction instrument. *MIS Quarterly, 18*(4), 453–461. https://doi.org/10.2307/249524

Eisenberger, R., Huntington, R., Hutchison, S., & Sowa, D. (1986). Perceived organizational support. *Journal of Applied Psychology, 71*(3), 500–507. https://doi.org/10.1037/0021-9010.71.3.500

Fornell, C., & Larcker, D. F. (1981). Evaluating structural equation models with unobservable variables and measurement error. *Journal of Marketing Research, 18*(1), 39–50. https://doi.org/10.1177/002224378101800104

Greenhaus, J. H., &Beutell, N. J. (1985). Sources of conflict between work and family roles. *Academy of Management Review, 10*(1), 76–88. https://doi.org/10.5465/amr.1985.4277352

Hair, J. F., Black, W. C., Babin, B. J., & Anderson, R. E. (2019). *Multivariate data analysis* (8th ed.). Cengage Learning.

Harter, J. K., Schmidt, F. L., & Hayes, T. L. (2002). Business-unit-level relationship between employee satisfaction, employee engagement, and business outcomes: A meta-analysis. *Journal of Applied Psychology, 87*(2), 268–279. https://doi.org/10.1037/0021-9010.87.2.268

Henseler, J., Ringle, C. M., & Sarstedt, M. (2015). A new criterion for assessing discriminant validity in variance-based structural equation modeling. *Journal of the Academy of Marketing Science, 43*(1), 115–135. https://doi.org/10.1007/s11747-014-0403-8

Hill, E. J., Hawkins, A. J., Ferris, M., & Weitzman, M. (2001). Finding an extra day a week: The positive influence of perceived job flexibility on work and family life balance. *Family Relations, 50*(1), 49–58. https://doi.org/10.1111/j.1741-3729.2001.00049.x

Hu, L., & Bentler, P. M. (1999). Cutoff criteria for fit indexes in covariance structure analysis: Conventional criteria versus new alternatives. *Structural Equation Modeling, 6*(1), 1–55. https://doi.org/10.1080/10705519909540118

Igolkina, A. A., & Meshcheryakov, G. (2020). semopy: A Python package for structural equation modeling. *Structural Equation Modeling: A Multidisciplinary Journal, 27*(6), 952–963. https://doi.org/10.1080/10705511.2019.1704289

Judge, T. A., & Piccolo, R. F. (2004). Transformational and transactional leadership: A meta-analytic test of their relative validity. *Journal of Applied Psychology, 89*(5), 755–768. https://doi.org/10.1037/0021-9010.89.5.755

Kahn, W. A. (1990). Psychological conditions of personal engagement and disengagement at work. *Academy of Management Journal, 33*(4), 692–724. https://doi.org/10.5465/256287

Kaiser, H. F. (1974). An index of factorial simplicity. *Psychometrika, 39*(1), 31–36. https://doi.org/10.1007/BF02291575

Kline, R. B. (2016). *Principles and practice of structural equation modeling* (4th ed.). Guilford Press.

Kossek, E. E., & Ozeki, C. (1998). Work–family conflict, policies, and the job–life satisfaction relationship: A review and directions for organizational behavior–human resources research. *Journal of Applied Psychology, 83*(2), 139–149. https://doi.org/10.1037/0021-9010.83.2.139

Kurtessis, J. N., Eisenberger, R., Ford, M. T., Buffardi, L. C., Stewart, K. A., & Adis, C. S. (2017). Perceived organizational support: A meta-analytic evaluation of organizational support theory. *Journal of Management, 43*(6), 1854–1884.

https://doi.org/10.1177/0149206315575554

Locke, E. A. (1976). The nature and causes of job satisfaction. In M. D. Dunnette (Ed.), *Handbook of industrial and organizational psychology* (pp. 1297–1349). Rand McNally.

Macey, W. H., & Schneider, B. (2008). The meaning of employee engagement. *Industrial and Organizational Psychology, 1*(1), 3–30. https://doi.org/10.1111/j.1754-9434.2007.0002.x

Nunnally, J. C., & Bernstein, I. H. (1994). *Psychometric theory* (3rd ed.). McGraw-Hill.

Podsakoff, P. M., MacKenzie, S. B., Lee, J.-Y., & Podsakoff, N. P. (2003). Common method biases in behavioral research: A critical review of the literature and recommended remedies. *Journal of Applied Psychology, 88*(5), 879–903. https://doi.org/10.1037/0021-9010.88.5.879

Preacher, K. J., & Hayes, A. F. (2008). Asymptotic and resampling strategies for assessing and comparing indirect effects in multiple mediator models. *Behavior Research Methods, 40*(3), 879–891. https://doi.org/10.3758/BRM.40.3.879

Rhoades, L., & Eisenberger, R. (2002). Perceived organizational support: A review of the literature. *Journal of Applied Psychology, 87*(4), 698–714. https://doi.org/10.1037/0021-9010.87.4.698

Rich, B. L., LePine, J. A., & Crawford, E. R. (2010). Job engagement: Antecedents and effects on job performance. *Academy of Management Journal, 53*(3), 617–635. https://doi.org/10.5465/amj.2010.51468988

Saks, A. M. (2006). Antecedents and consequences of employee engagement. *Journal of Managerial Psychology, 21*(7), 600–619. https://doi.org/10.1108/02683940610690169

Schaufeli, W. B., & Bakker, A. B. (2004). Job demands, job resources, and their relationship with burnout and engagement: A multi-sample study. *Journal of Organizational Behavior, 25*(3), 293–315. https://doi.org/10.1002/job.248

Schaufeli, W. B., Bakker, A. B., &Salanova, M. (2006). The measurement of work engagement with a short questionnaire: A cross-national study. *Educational and Psychological Measurement, 66*(4), 701–716. https://doi.org/10.1177/0013164405282471

Schaufeli, W. B., Salanova, M., González-Romá, V., & Bakker, A. B. (2002). The measurement of engagement and burnout: A two sample confirmatory factor analytic approach. *Journal of Happiness Studies, 3*(1), 71–92. https://doi.org/10.1023/A:1015630930326

Spector, P. E. (1997). *Job satisfaction: Application, assessment, causes, and consequences*. Sage.

Tims, M., Bakker, A. B., & Xanthopoulou, D. (2011). Do transformational leaders enhance their followers' daily work engagement? *The Leadership Quarterly, 22*(1), 121–131. https://doi.org/10.1016/j.leaqua.2010.12.011

Yalabik, Z. Y., Popaitoon, P., Chowne, J. A., & Rayton, B. A. (2013). Work engagement as a mediator between employee attitudes and outcomes. *The International Journal of Human Resource Management, 24*(14), 2799–2823. https://doi.org/10.1080/09585192.2013.763844

Zhao, X., Lynch, J. G., & Chen, Q. (2010). Reconsidering Baron and Kenny: Myths and truths about mediation analysis. *Journal of Consumer Research, 37*(2), 197–206. https://doi.org/10.1086/651257